REVISIONS				
ZONE	REV	DESCRIPTION	DATE	APPROVED
	A	WAS 22 1/2	06MAY02	

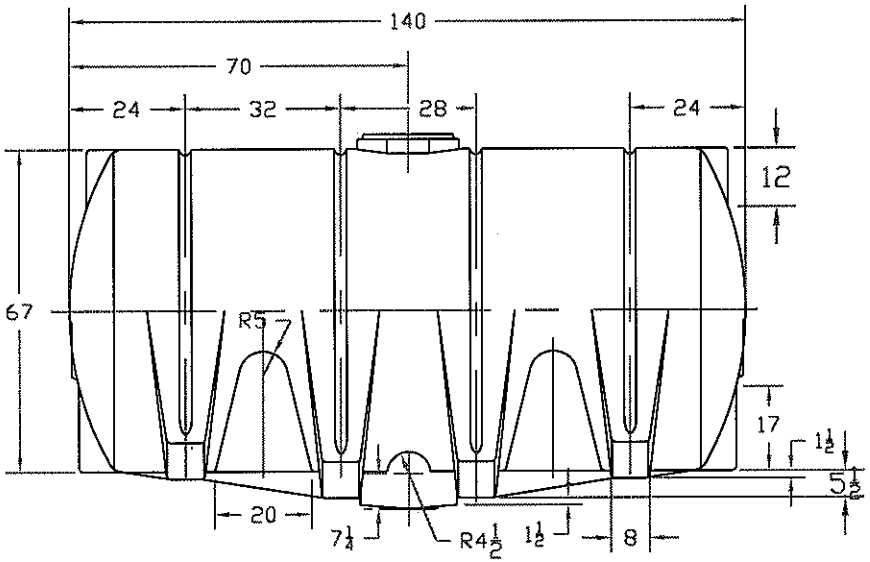

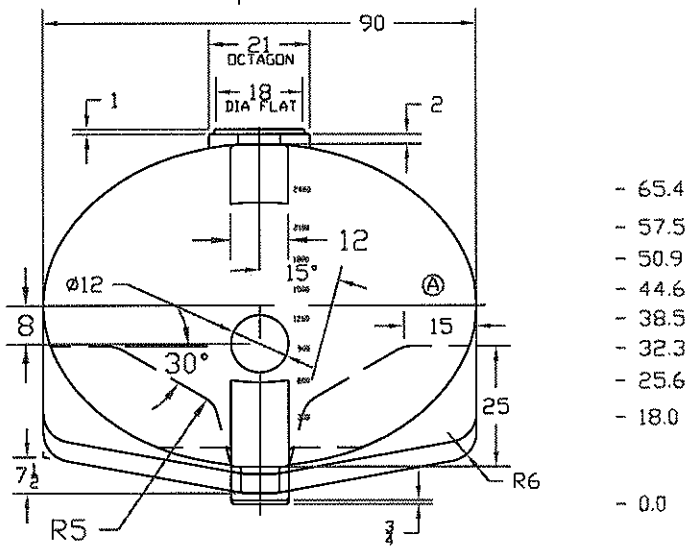

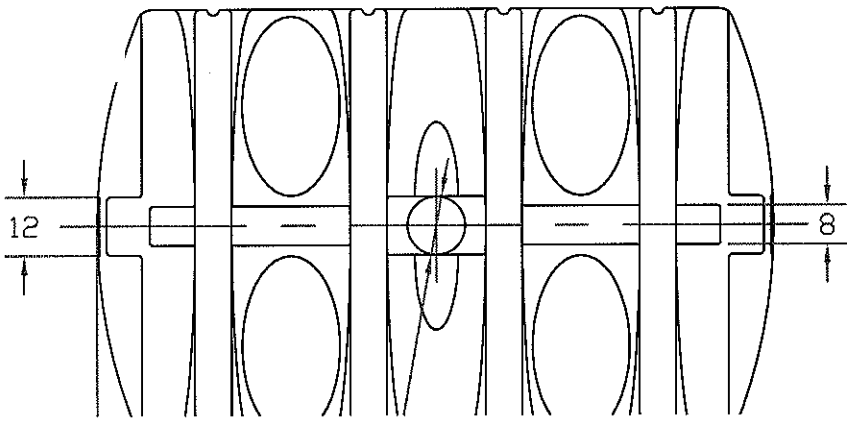

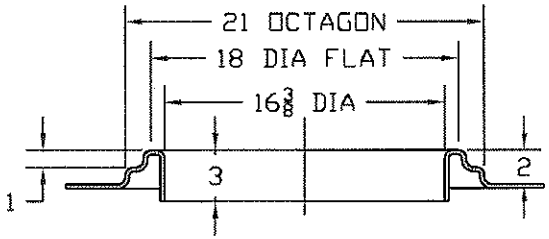

FILL OPENING DETAILS
1/8 SCALE

NORWESCO
ST. BONIFACIUS, MN

2610 GALLON ELLIPTICAL DRAINABLE LEG TANK

JTP 21MAY01	SIZE B	FSCM NO.	DWG NO.	REV
	SCALE 1/32		SHEET	