| ZONE | REV | DESCRIPTION | DATE |
|---|---|---|---|
| | D | WAS 72 1/2 | 03DEC04 |

REVISIONS

| ZONE | REV | DESCRIPTION | DATE | APPROVED |
|---|---|---|---|---|
| | C | REDRAWN | 10FEB97 | |
| | C1 | CORRECTED, WAS 27-1/2 | 23SEP02 | |

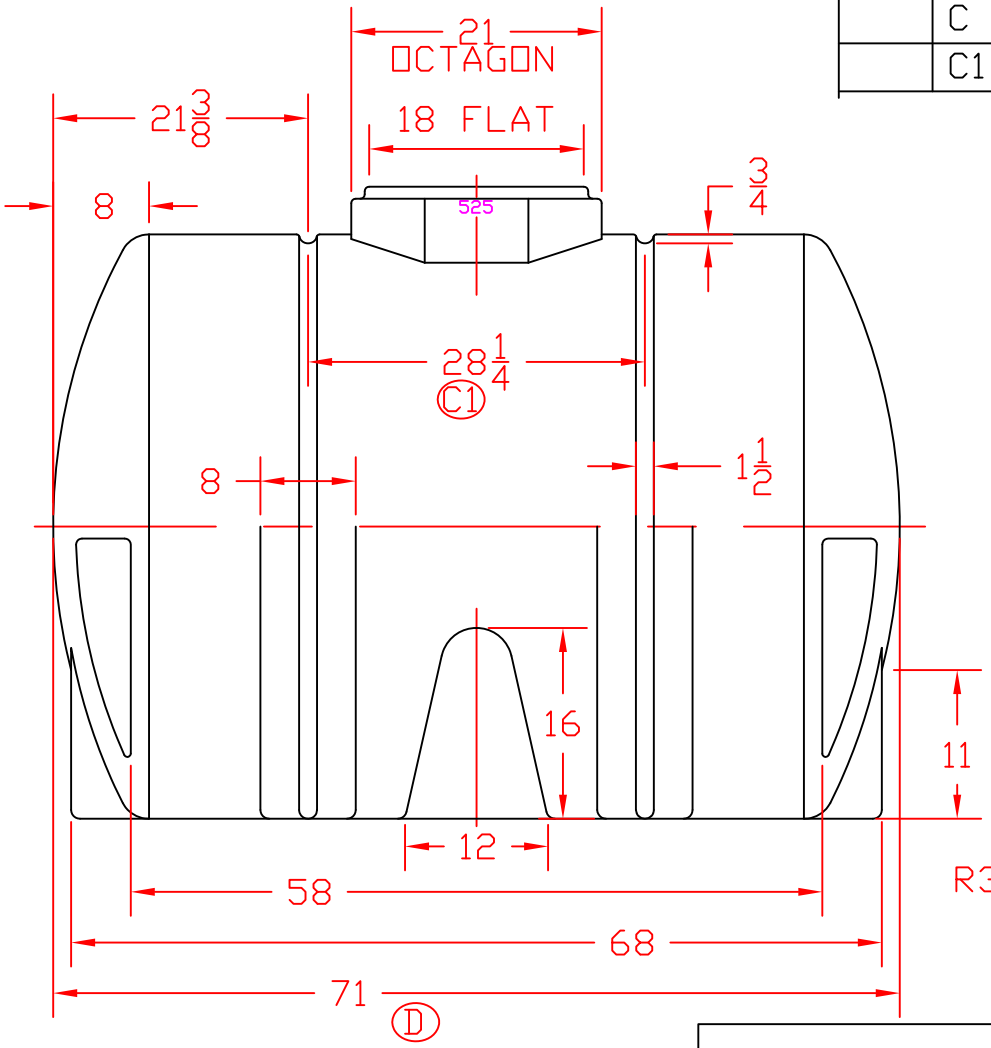


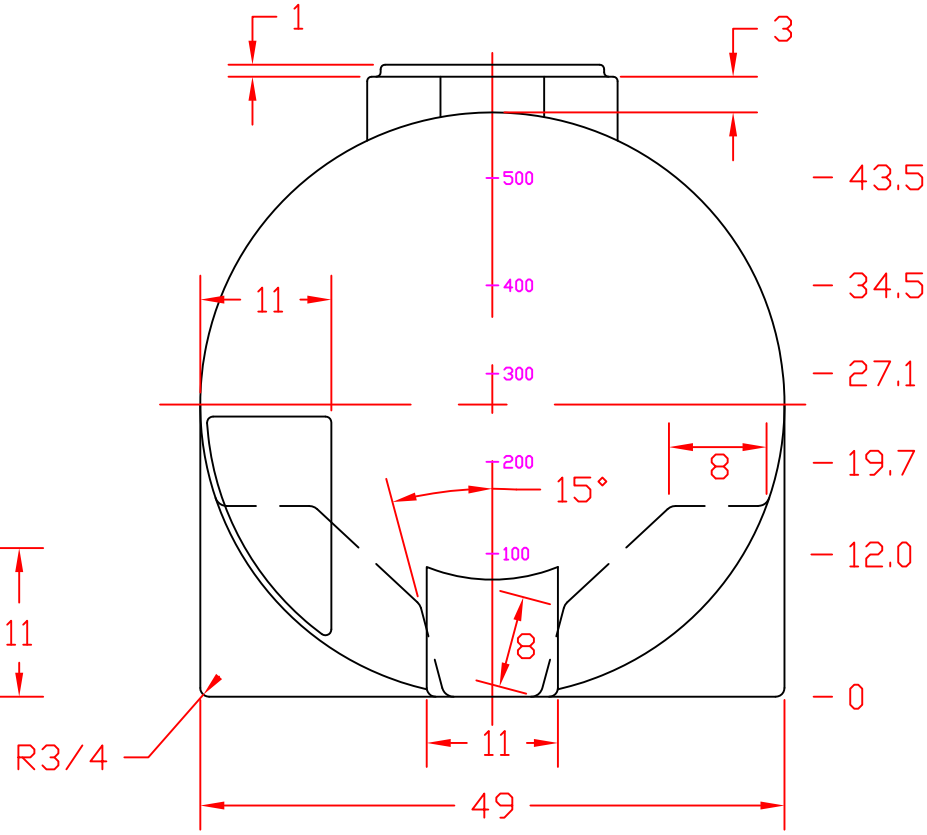


NOTE: GALLONAGE MARKS BOTH ENDS

NORWESCO
ST. BONIFACIUS, MN

525 GAL HORIZONTAL TANK

JTP 10FEB97

| SIZE | FSCM NO. | DWG NO. | REV |
|---|---|---|---|
| A | | | D |

SCALE 1/16 SHEET