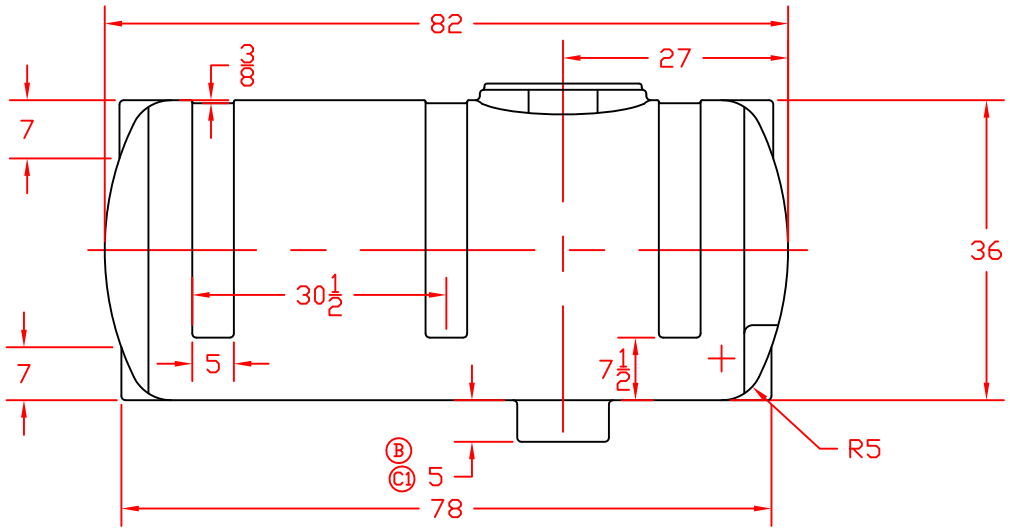


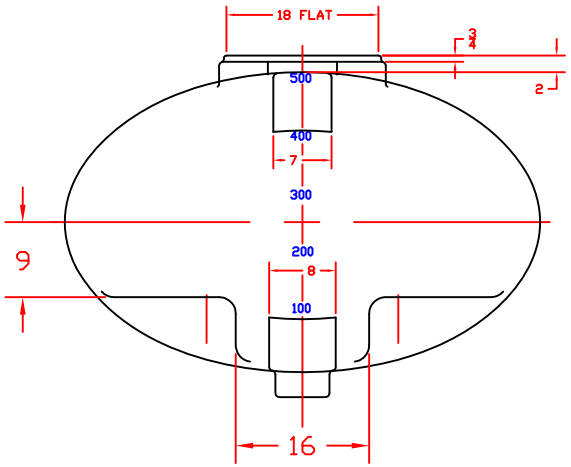


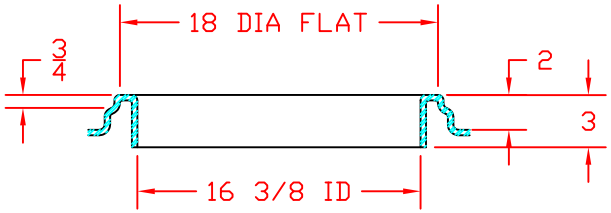


FILLWELL DETAIL 1/8 SCALE

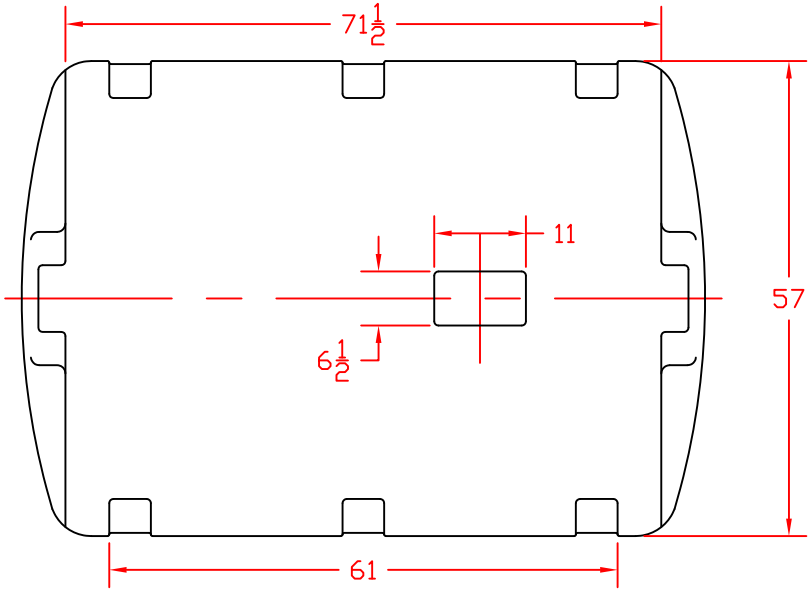


C2

FOB LANCASTER, OH

| ZONE | REV | DESCRIPTION | DATE | APPROVED |
|---|---|---|---|---|
| | C | ① WAS 3 ② GA RMVD | 23OCT09 | |
| | B | WAS 5 | 29DEC06 | |
| | A | REDRAWN | 15AUG97 | |

REVISIONS

NORWESCO
ST. BONIFACIUS, MN

500 GALLON ELLIPTICAL SPRAYER TANK

JTP 15AUG97

| SIZE | FSCM NO. | DWG NO. | REV |
|---|---|---|---|
| B | | | B |

SCALE 1/16 SHEET