REVISIONS				
ZONE	REV	DESCRIPTION	DATE	APPROVED

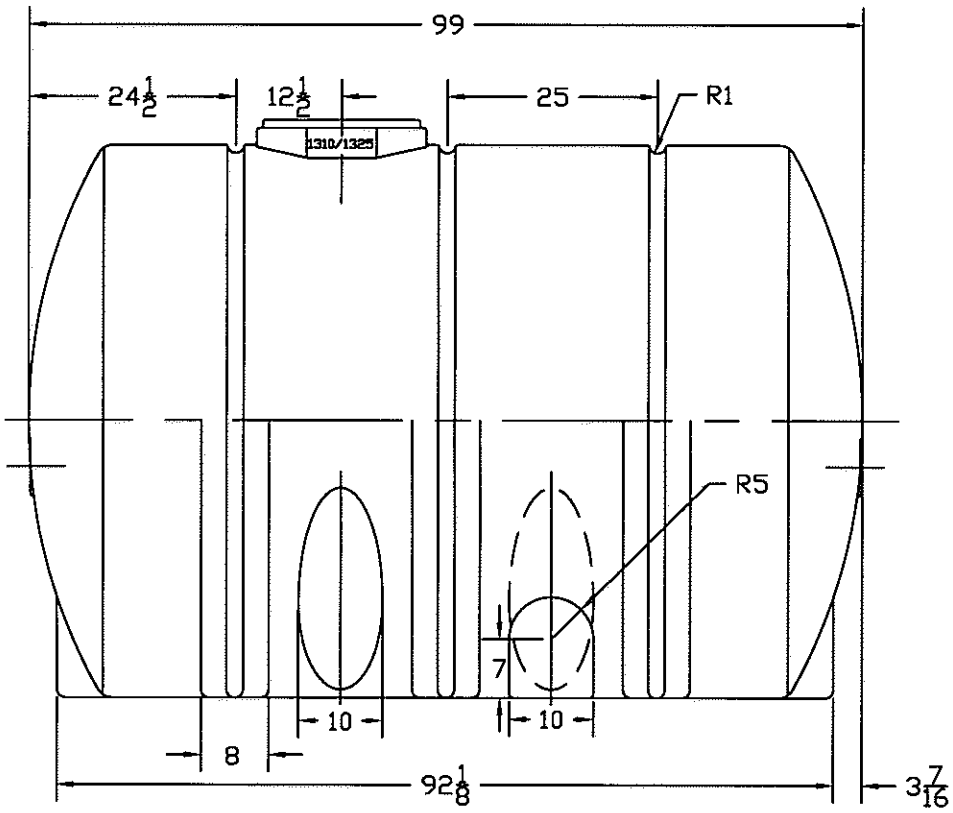

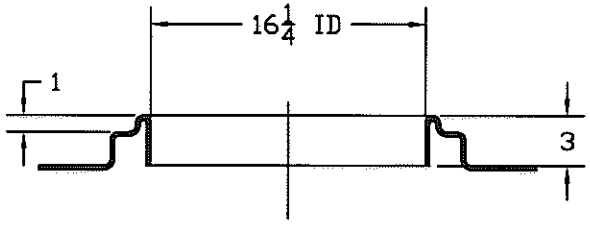

FILLWELL DETAIL - 1/8/ SCALE

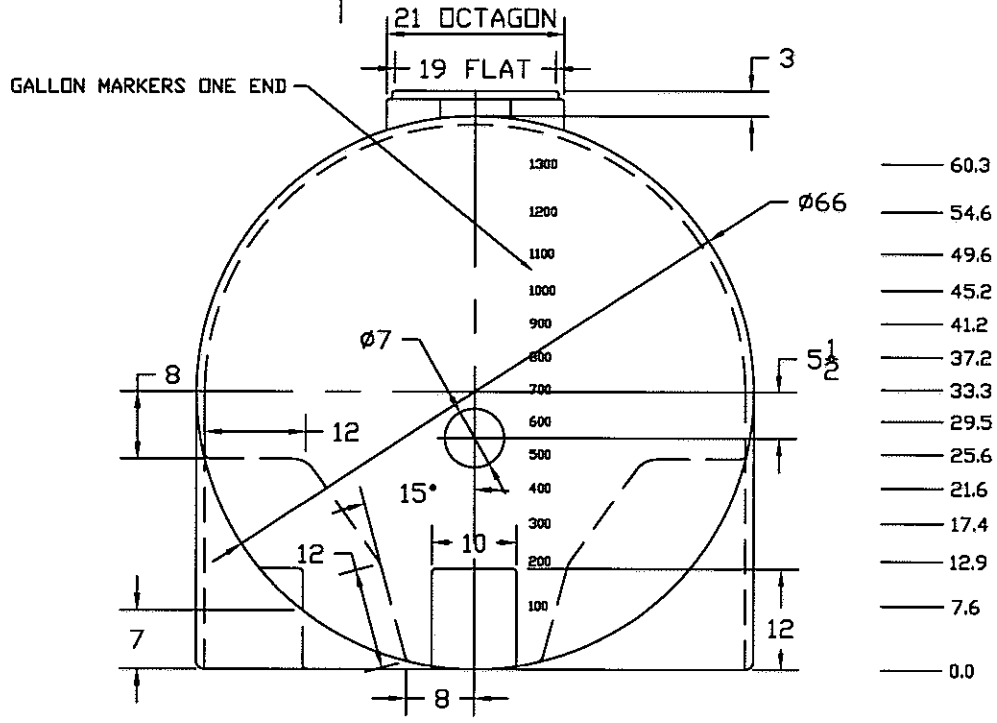

	NORWESCO ST. BONIFACIUS, MN			
	1325 GALLON HORIZONTAL LEG TANK			
JTP 04AUG03	SIZE B	FSCM NO.	DWG NO.	REV
	SCALE 1/16		SHEET	