REVISIONS				
ZONE	REV	DESCRIPTION	DATE	APPROVED

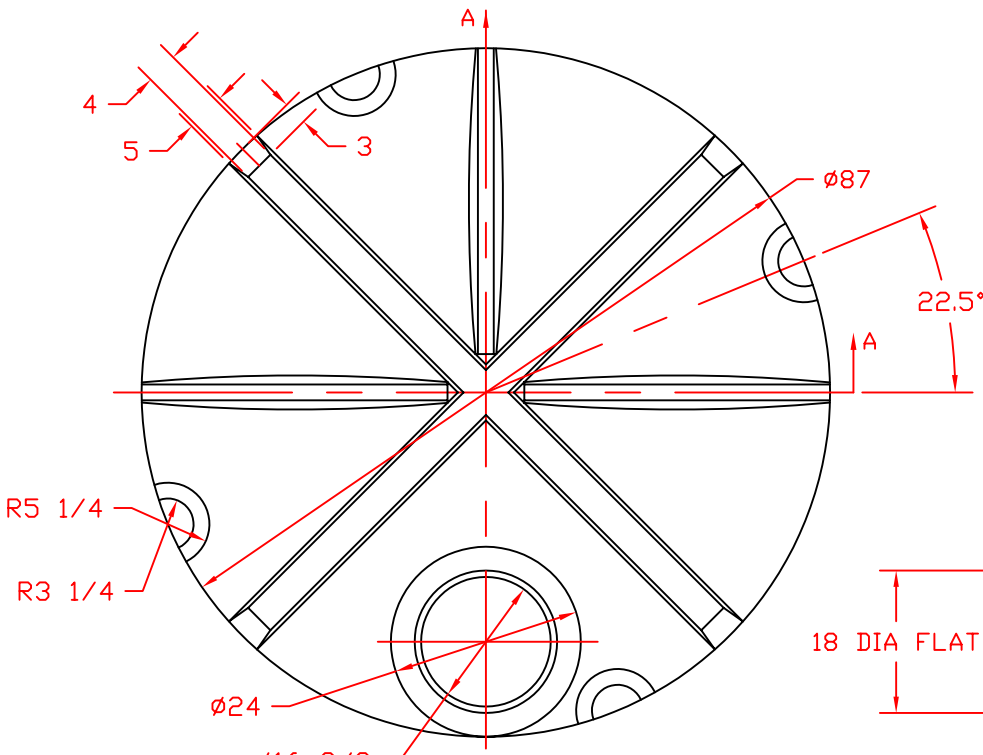

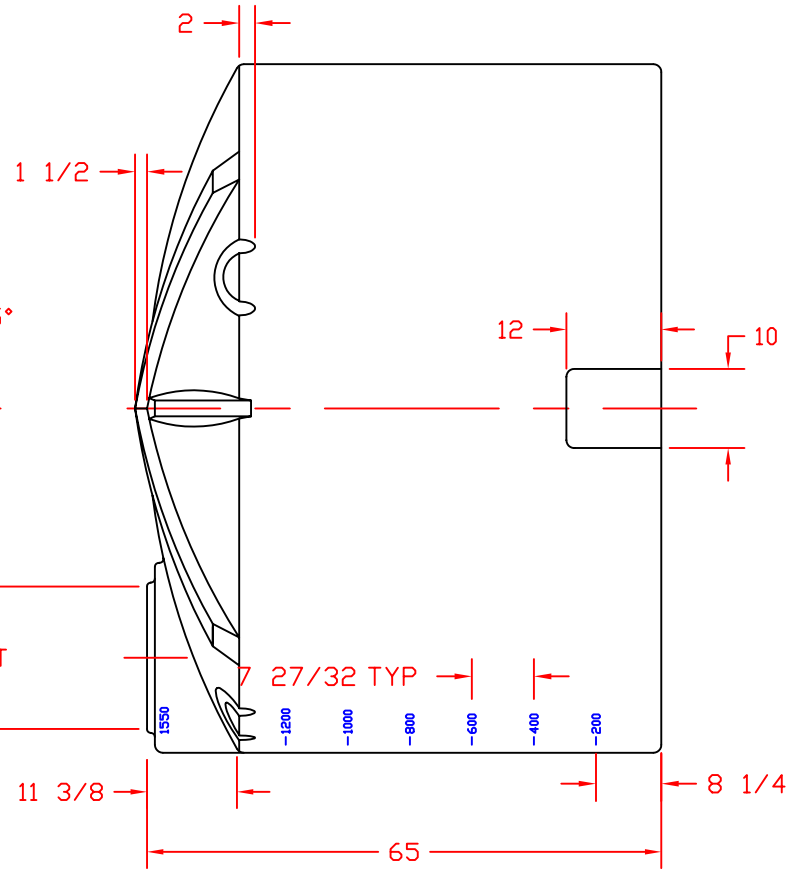

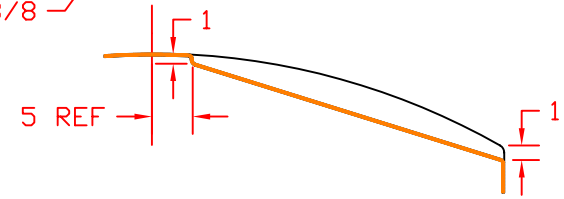

SECTION A-A

NORWESCO
ST. BONIFACIUS, MN

1550 GALLON VERTICAL TANK W/ GUSSET DOME

JTP 06NOV00	SIZE B	FSCM NO.	DWG NO.	REV
	SCALE 1/16		SHEET	