ZONE	REV	DESCRIPTION	DATE	APPROVED
	A	BAND WAS 1-PC, (3) REQ	26APR02	
	B	BAND REVISED & REDRAWN	10APR09	

PAINT BLACK

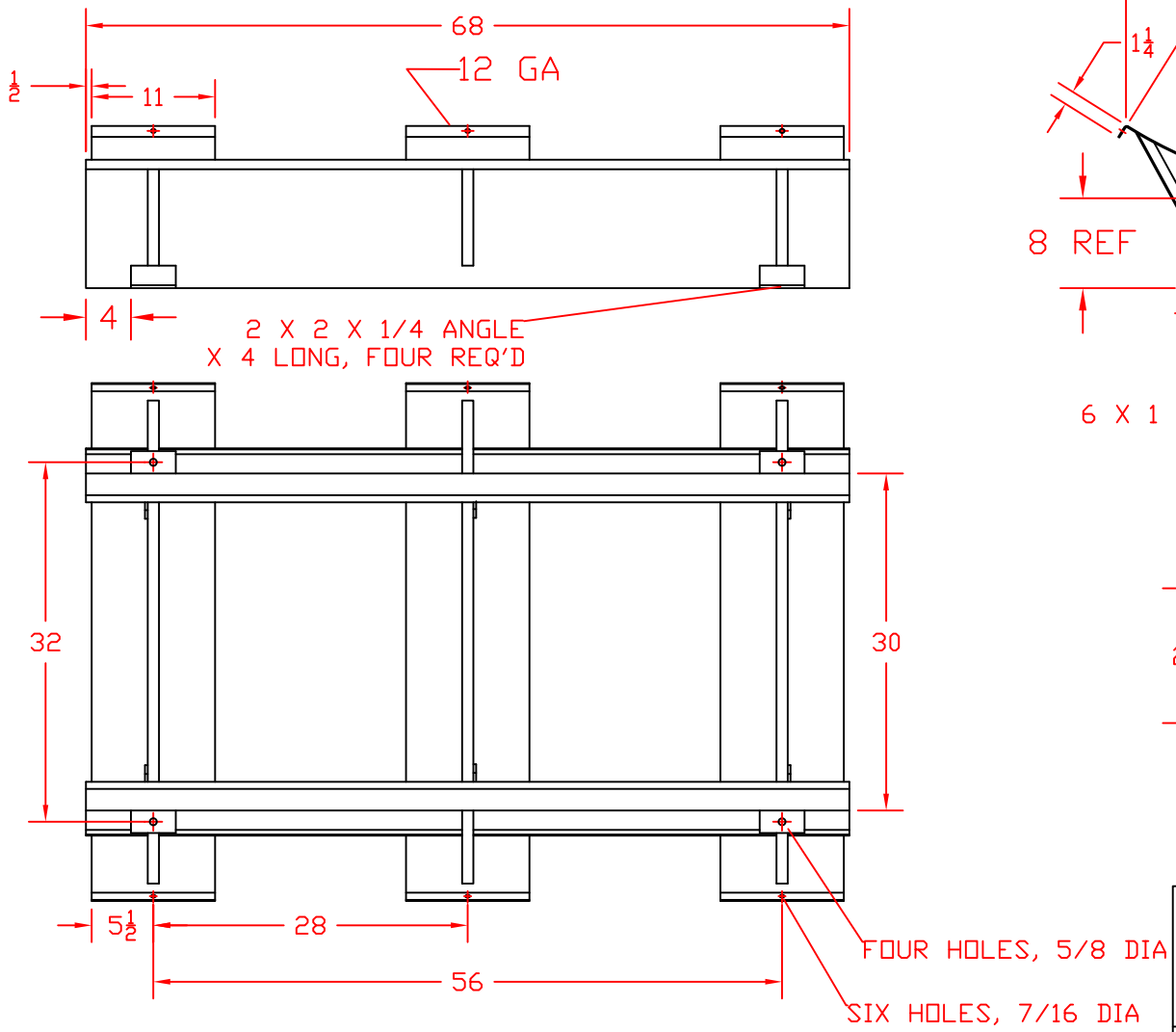

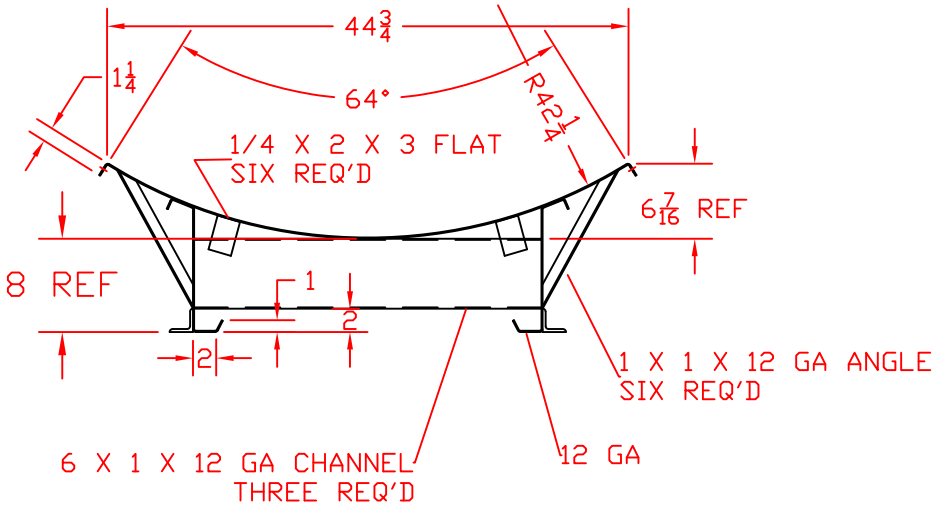

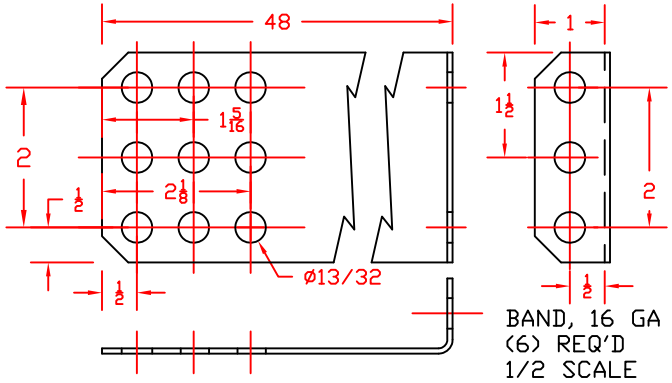

NORWESCO
ST. BONIFACIUS, MN

500 ELLIPTICAL SKID

JTP 28AUG01

SIZE	FSCM NO.	DWG NO.	REV
B			B

SCALE 1/12 SHEET